

Murrey®

Murrey Coin Operated Tables

The most TROUBLE FREE mechanism on the market on all Murrey Coin Tables

4 × 8 — 3½ × 7

Murrey Coin Operated Tables

The Finest Coin Operated Table Manufactured
The Murrey Coin Operated Table features Professional
Quality for Greater Accuracy, Faster Action, More Player Satisfaction
Genuine 1 piece Slate-Bed — Accurately Scaled to Regulation Table

- Long Wearing Professional Billiard Cloth
- Professional Live Rubber Cushions — Fitted with Micrometer Precision
- Straight Line Rails for Truer and Faster Rebound
- Cast Aluminum Castings on all Corner Pockets
- Cast Aluminum Adjustable Leg Levelers
- Attractive Wood Simulated Laminate Rails and Cabinet — Burn Proof — Mar Proof — Stain Resistant
- Streamlined Fast Clog-Free Ball Return
- Recessed Trouble-Free Coin Operating Mechanism
- Locked Cash Box (Separate)
- Easy to See — Easy to Remove Ball Viewer
- Coin Meter Standard Equipment
- Solid Plywood Aprons and Cabinet
- Solid Wood Tapered Pedestals

Tables Recovered Without Removing Slate (1 Man Job)
Convenient, Adjustable Cue Ball Separator

SIZES:

MODEL M I — 4 × 8 w ¾″ Slate
Overall Width 4′ 8″ — Length 8′ 4″
Playing area 44″ × 88″

MODEL M II — 3½ × 7 Overall Width 4′ 4″ — Length 7′ 8″
Playing area 40″ × 80″ — ¾″ Slate Bed 650 lb 1495 + Tax

Note: 25¢ Coin Slot Standard Equipment
Other coin slots available upon request.

For Prices Contact Your Murrey Representative Or Our Main Office.

Includes Playing Equipment as follows: 4 — Cues 1 — Cue Rack 1 — BA-3 Triangle
1 — Set BB-19A Cast Phenolic Balls 1 — BA-18 Chalkholder

Murrey®

Murrey & Sons Co., Inc.
14150 So. Figueroa St.
Los Angeles, CA. 90061
(213) 321-5161

Distributed by:

14150 South Figueroa Street, Los Angeles, California 90061
AREA CODE (213) 323-1752 ● 321-5161

BILLIARD TABLE ROOM MEASUREMENT CHART

MINIMUM SPACE REQUIRED
40" × 80" TABLE
3½ × 7

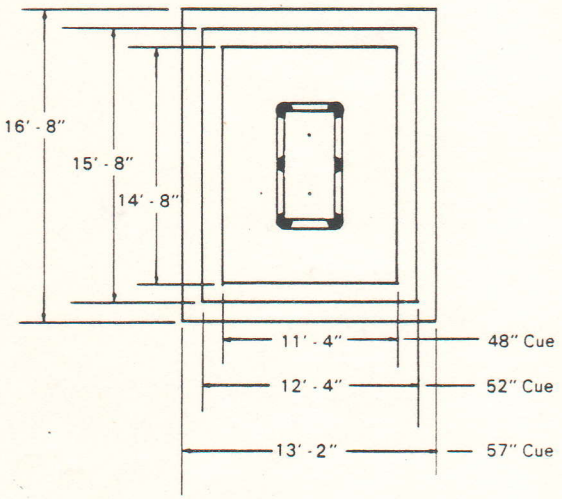

MINIMUM SPACE REQUIRED
44" × 88" TABLE
HOME SIZE 4 × 8

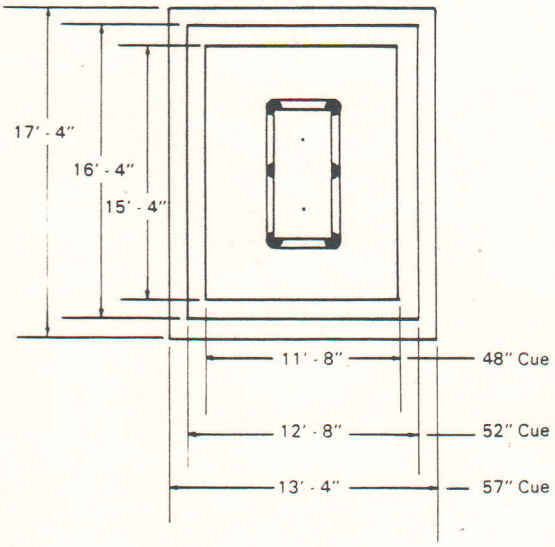

MINIMUM SPACE REQUIRED
46" × 92" TABLE
REGULATION SIZE 4' × 8'

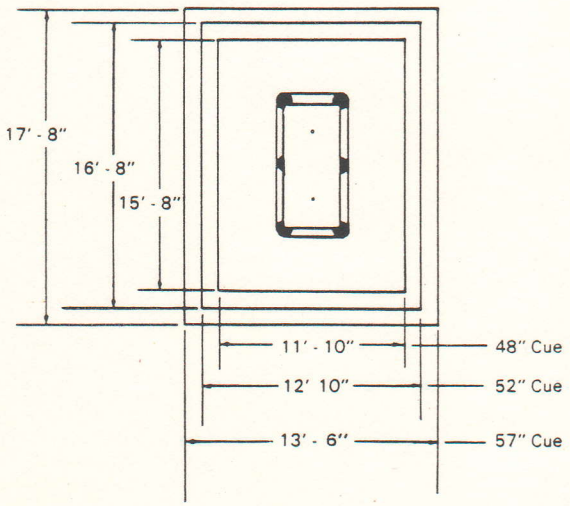

MINIMUM SPACE REQUIRED
50" × 100" TABLE
REGULATION SIZE 4½' × 9'

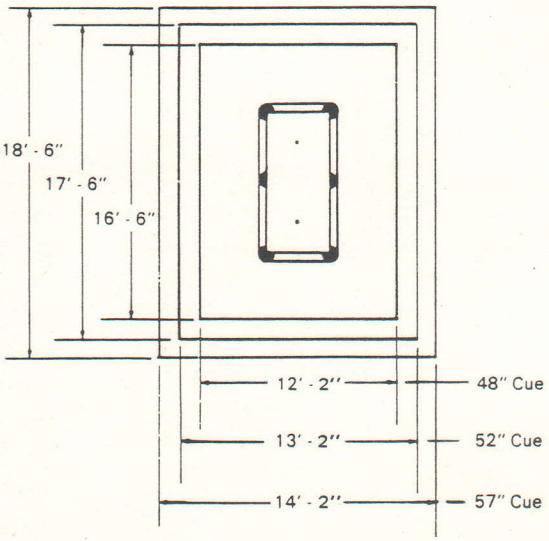

MURREY & SONS CO.
18155 EUCLID
FOUNTAIN VALLEY, CA. 92708
(714) 549-9417

MURREY & SONS COMPANY, INC.
14150 So. Figueroa St.
Los Angeles, CA 90061

COIN-OP ACCESSORY KIT

1 SE	BB-19A	COIN-OP BILLIARD BALLS
1 EA	BA-3	PLASTIC TRIANGLE
4 EA	SC-5	CUES
1 EA	BA-15	CHALK HOLDER W/CHALK
1 EA	CR-9	CUE RACK
1 EA	BA-45	INSTRUCTION BOOKLET