McWelco

High Profile Side Boxes

5/1/87

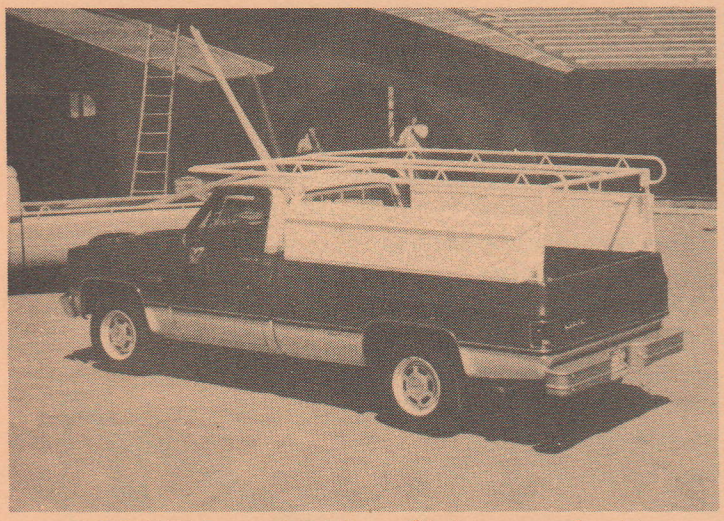

With McWelco rack high profile boxes are best installed with option "X".

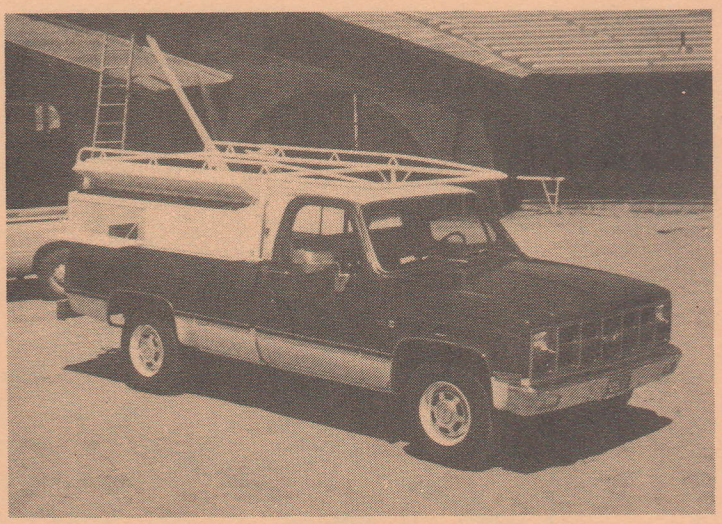

The 9000 series box is the ultimate in organization capability

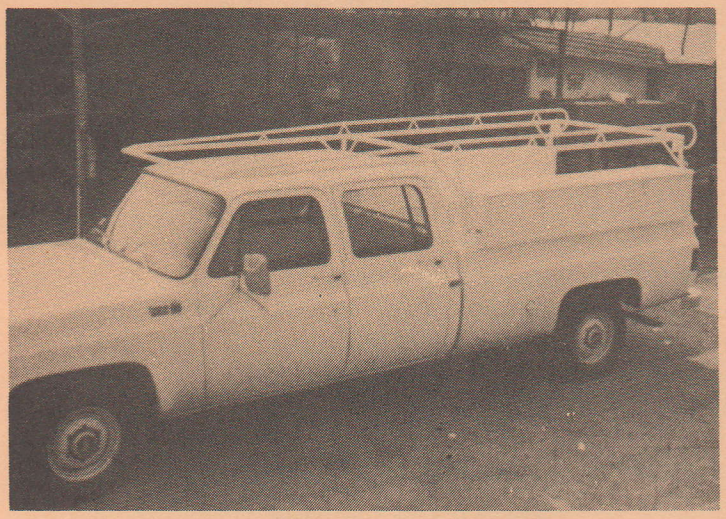

Lengths to fit all types of trucks.

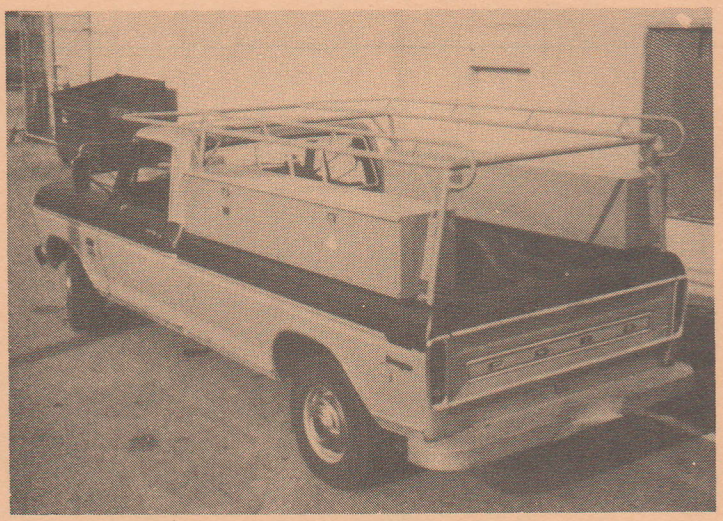

8000 series box mounted to rack legs (option "X")

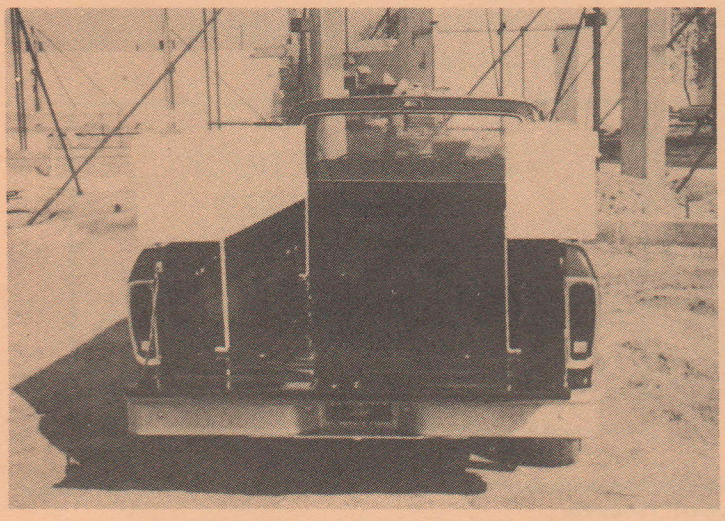

Leg-mounted application.

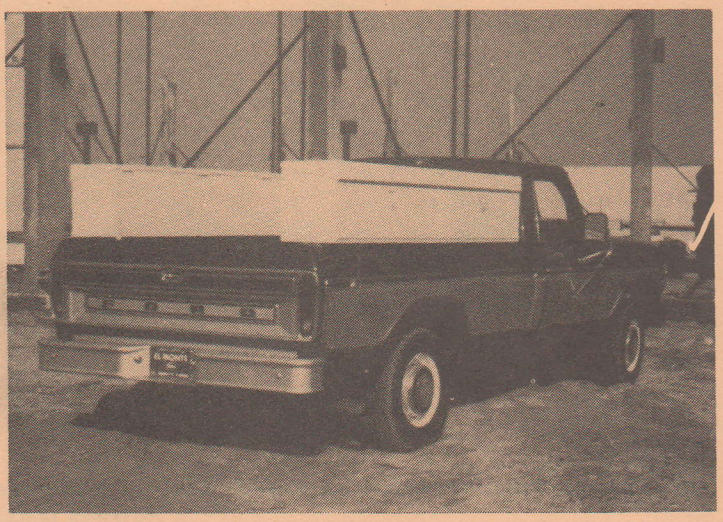

With or without a rack; still the best box you can buy!

McWelco

High Profile Side Boxes

5/1/87

Solid Top			
Model	Dimensions	Doors	Wt /Lbs
8148	48L x 14D x 16H	1	90
8167	67L x 14D x 16H	1	115
8278	78L x 14D x 16H	2	135
8287	87L x 14D x 16H	2	150

Removable shelf with 1" lip.
Right or left door position.

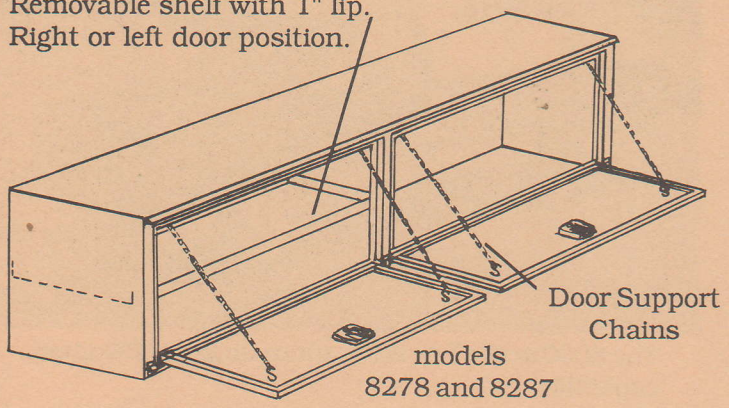

models 8278 and 8287

8000 and 9000 Series McWelco Longlife Features Include:

- Rigid formed 16 gauge steel body and heavy duty 14 gauge doors for maximum strength.
- Weather tight doors with positive acting stops.
- Smooth ground fully welded seams.
- Moisture protection by builtin rain deflector.
- Convenient paddle latch handles with built in key locking system.
- Durable gloss white urethane acrylic enamel finish.

Shelf for #8148 – 18" long is permanent (stationary)
Shelf for #8167 – 39" long is removable

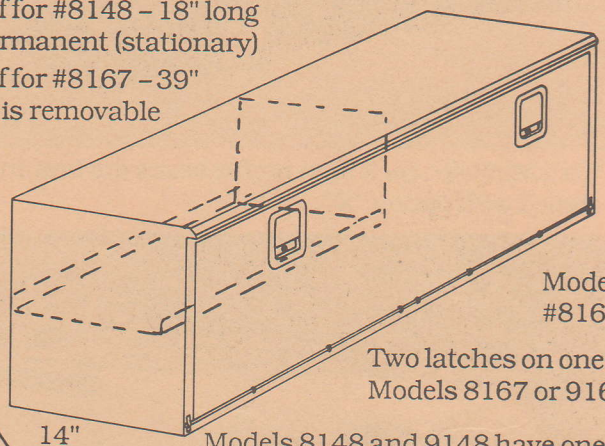

Model #8167

Two latches on one door, Models 8167 or 9167.

Models 8148 and 9148 have one latch

Solid Top			
Model	Dimensions	Doors	Wt /Lbs
9148	48L x 14D x 17H	1	110
9167	67L x 14D x17H	1	150
9278	78L x 14D x17H	2	170
9287	87L x 14D x17H	2	185

Models 9278 and 9287 Flip-Top

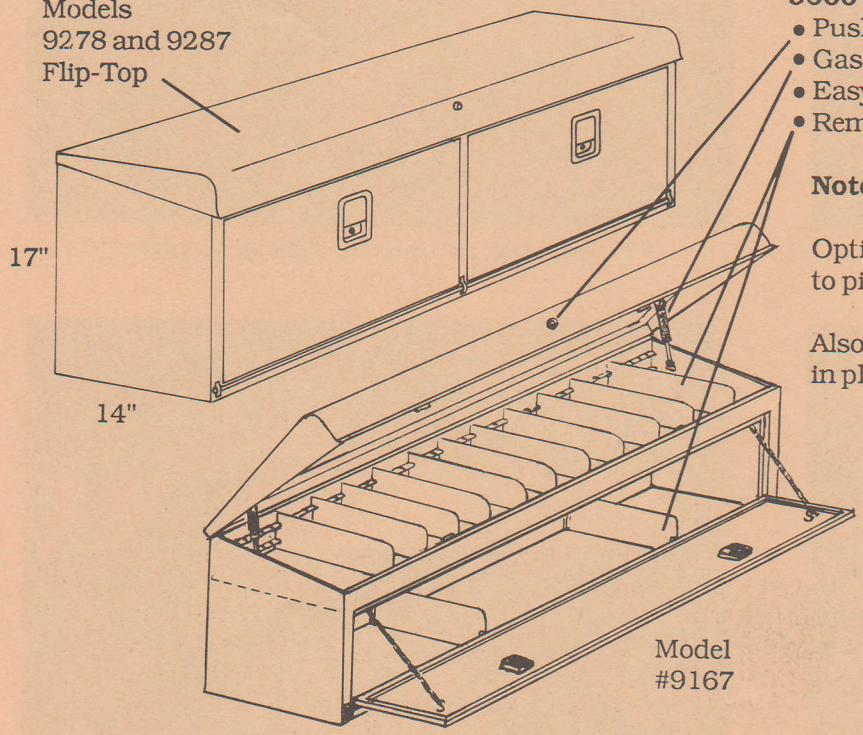

Model #9167

9000 Series Only - Top Section:

- Push button actuated slam - latch locking system
- Gas operated shocks hold lid open.
- Easy opening, reinforced lid.
- Removable dividers.

Note: Shelf in lower sectional Optional.

Optional mounting legs for installation to pick-up truck beds.

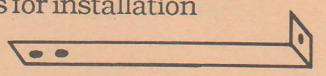

Also see Option 'X' for installation to racks in place of legs (Domestic Rack Page.)

AMERICAN TRUCK OUTFITTERS

Formerly Security Emporium

8605 KEWEN AVE.
SUN VALLEY,CA 91352
(818) 504-0235

1201 E. BALL RD.,
ANAHEIM, CA 92805
(714) 999-5061

McWelco Longlife Quality Products

are conditionally guaranteed against defects in material and workmanship to the original owner for three years and will be repaired or replaced at our option (proof of purchase date shall be the responsibility of the customer.)

McWelco

Low Profile Side Boxes

5/1/87

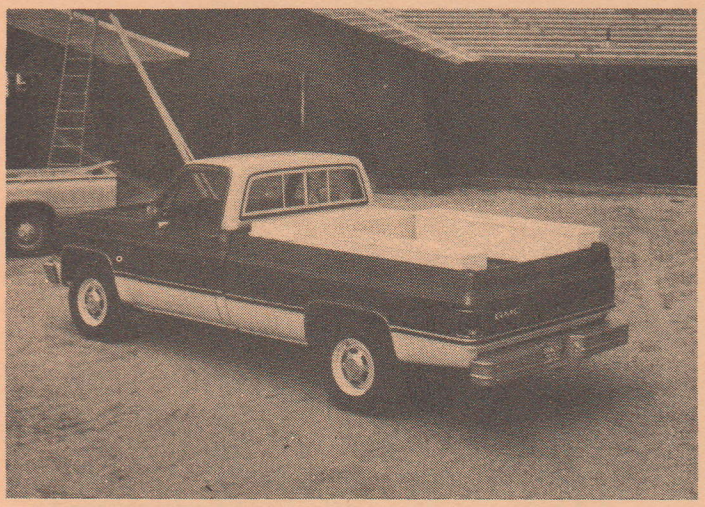

Low profile design offers maximum visibility and better truck balance; also works well in combination with cross-cab boxes.

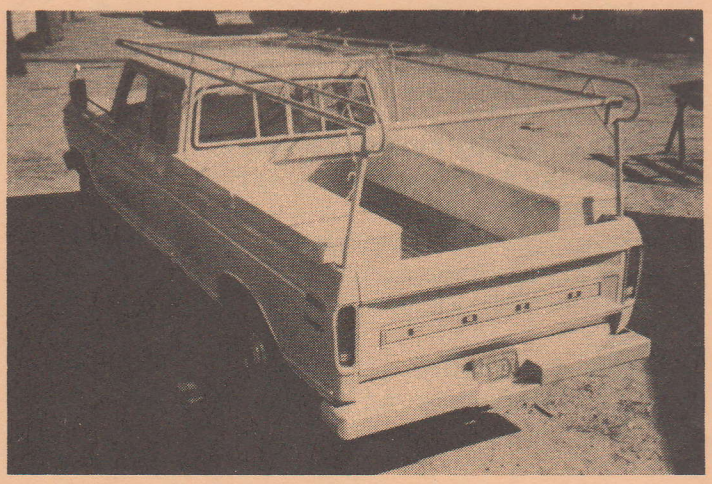

Designed to fit with a rack. Makes an excellent combination.



Perfect for compact trucks.

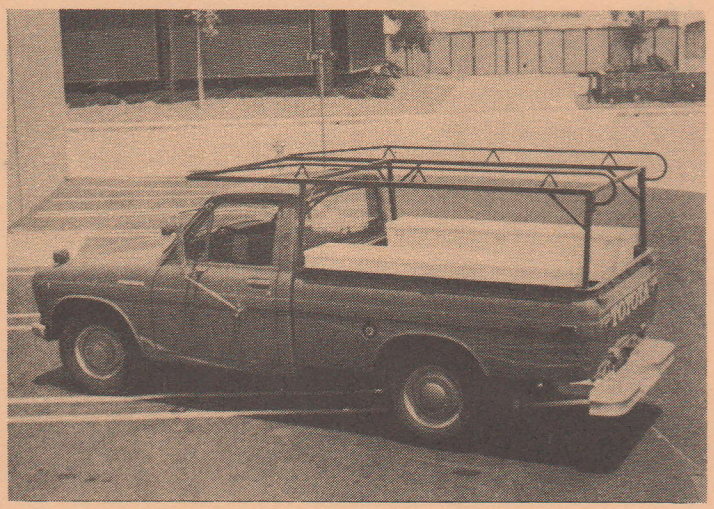

We've been building boxes since import trucks were imported.

McWelco

Low Profile Side Boxes

5/1/87

Model	Length	lids	Wt /Lb
4148D	48	1	60
4158D	58	1	70
4162S	62	1	75
4278D	78	2	95
4287S	87	2	105

Note: 'S' Model Boxes fit most full size pick-up trucks best. 'D' Model Boxes fit most compact pick-up trucks best. For the best fit, the distance from the top of the side rail down to the top of the fender should be measured.

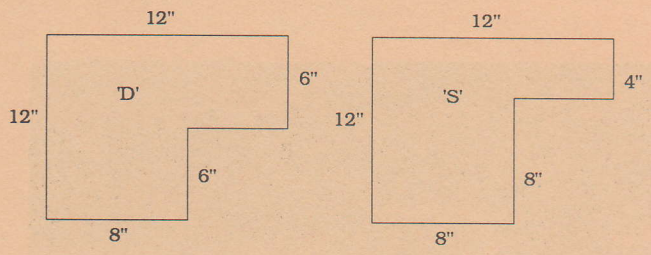

McWelco Longlife Features Include:

- Rigid formed 16 gauge steel body and heavy duty 14 gauge lids.
- Weather tight reinforced lids with positive acting gas operated support arms
- Exclusive theft resistant "slam-latch locking design."
- Built in divided trays.
- Durable gloss white urethane enamel finish.

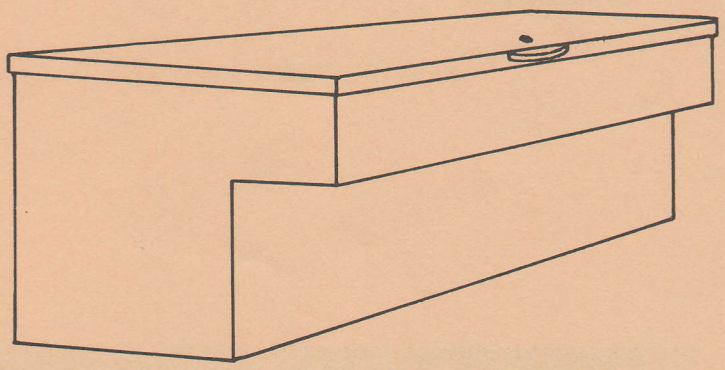

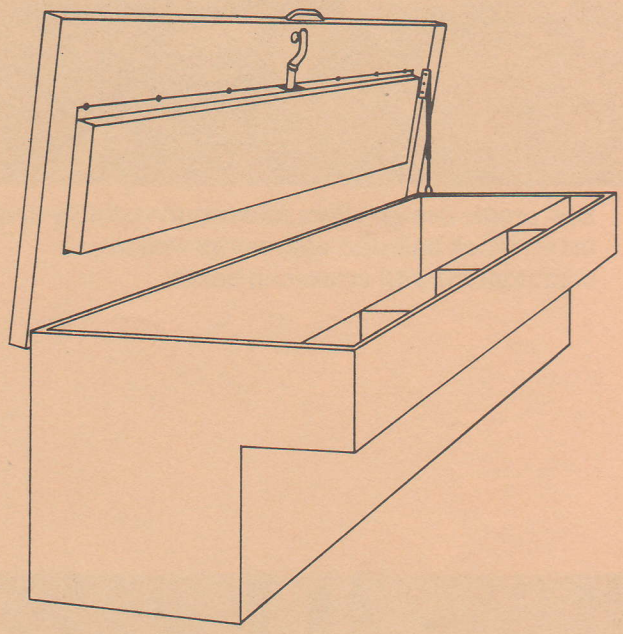

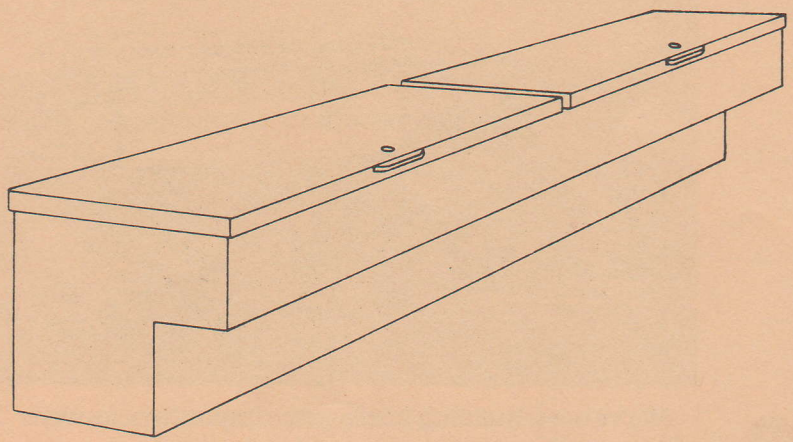

AMERICAN TRUCK OUTFITTERS

Formerly Security Emporium

8605 KEWEN AVE.
SUN VALLEY,CA 91352
(818) 504-0235

1201 E. BALL RD.,
ANAHEIM, CA 92805
(714) 999-5061

McWelco Longlife Quality Products

are conditionally guaranteed against defects in material and workmanship to the original owner for three years and will be repaired or replaced at our option (proof of purchase date shall be the responsibility of the customer.)

McWelco

Compact Cross-Cab Boxes

5/1/87

McWelco 78-CS Series Features:

- Rigid formed 16 gauge body and lid.
- Built-in mechanical weather seal.
- Smooth ground continuous welded seams.
- Full sliding steel tray keeps small parts within
- reach.
- Easy mount angle.
- Easy opening, reinforced lid.
- Gas operated shock holds lid open.
- Double locking slam-latch security system.
- Designed to fit with overhead rack.
- Durable gloss white urethane acrylic enamel finish.

Model	Length	Depth	Height	Lids	Wt /Lb
78AC	52 3/4	20	17	1	150
78AN	52 3/4	20	17	1	150

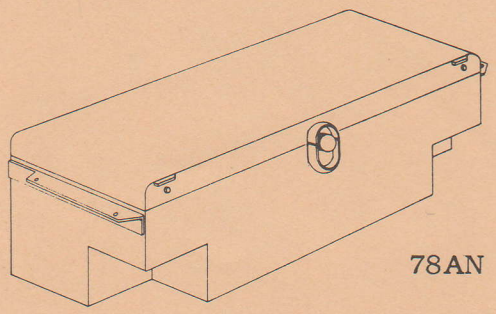

78AN

The McWelco 78-CS Series is a stylish but rugged Cross Cab Box, constructed from heavy 16 gauge reinforced formed steel. Our one lid box gives you more room to get "in and out" with ease, no confinement as common with two lid boxes. We have designed a unique "double actuated" locking system, that permits entry from either side. **McWelco's** exclusive weather proof design keeps even the worst weather out – protecting your valuable tools.

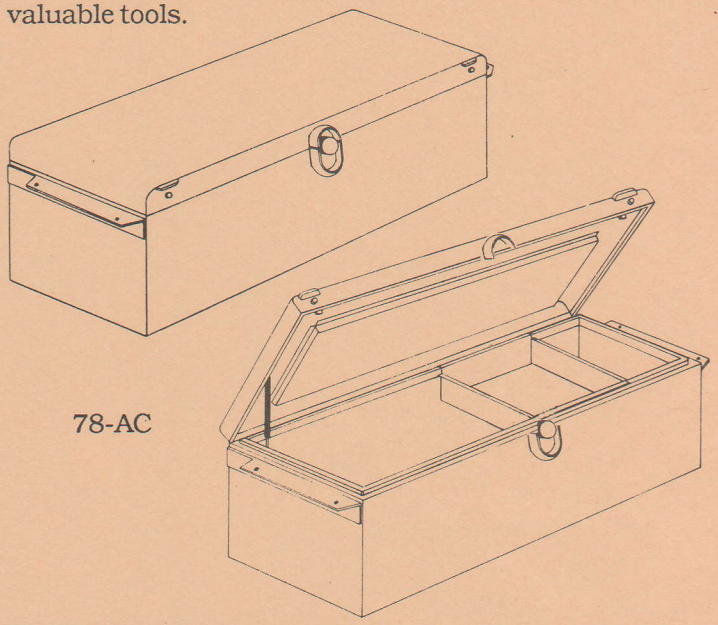

78-AC

McWelco's Side Opening Cross Cab Boxes for compact pick-up trucks are designed for the buyer who insists on quality, all steel construction, smooth ground fully welded seams, secure locking systems, full sliding steel tray and weather tight seals. Our compact model tool boxes are for the discriminating buyer.

Model	Length	Depth	Height	Lids	Wt /Lb
7L21	61/53	22	171/2	2	140
7D21	53 3/4	18	16	2	120
7VW21*	49 1/2	18	14	2	100

Will fit domestic stepside trucks

*For short bed and extended cab trucks

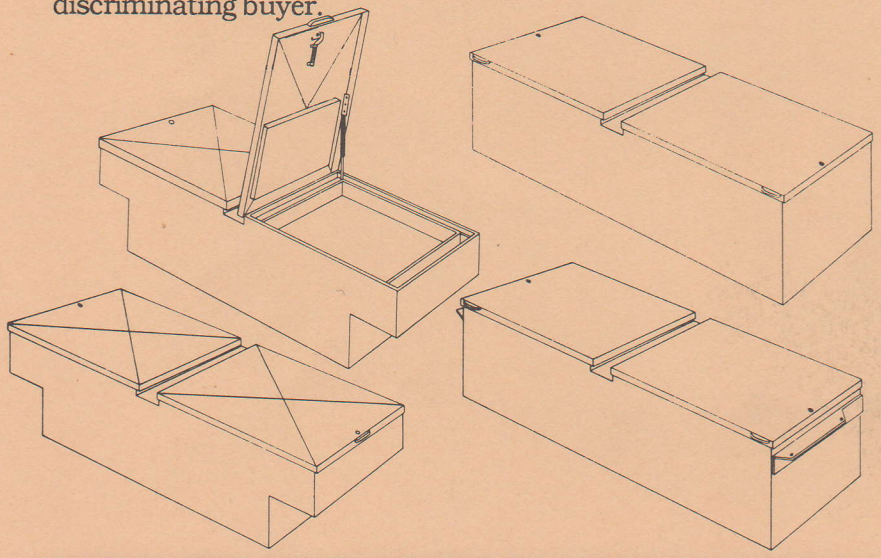

AMERICAN TRUCK OUTFITTERS

Formerly Security Emporium

8605 KEWEN AVE.
SUN VALLEY,CA 91352
(818) 504-0235

1201 E. BALL RD.,
ANAHEIM, CA 92805
(714) 999-5061

McWelco Longlife Quality Products

are conditionally guaranteed against defects in material and workmanship to the original owner for three years and will be repaired or replaced at our option (proof of purchase date shall be the responsibility of the customer.)

McWelco

Domestic Cross-Cab Boxes

5/1/87

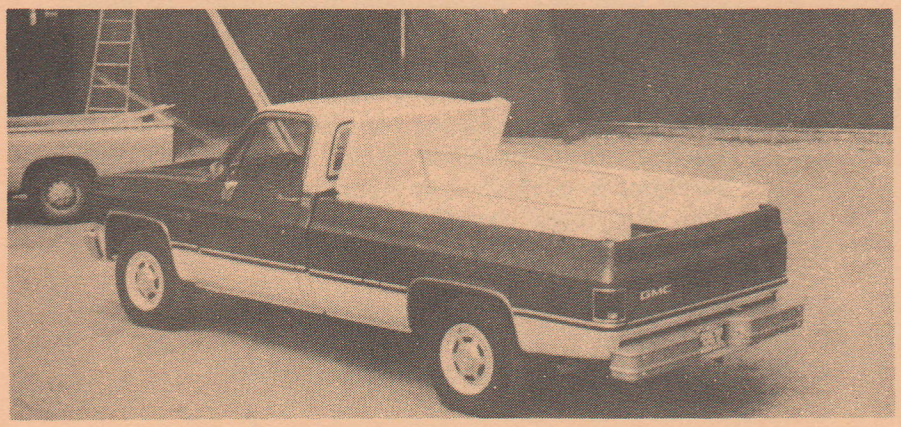

Organize your tools with a combination of boxes.

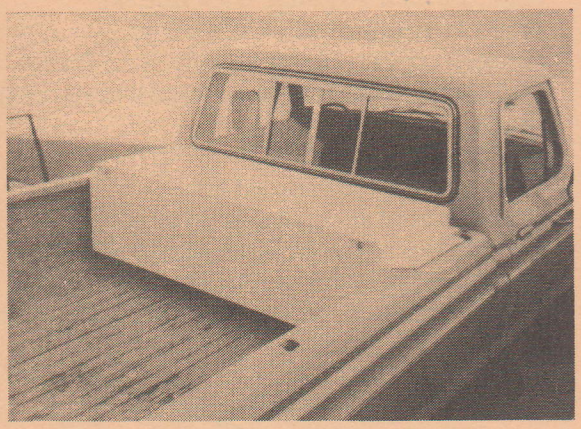

The perfect Trunk for your Truck.

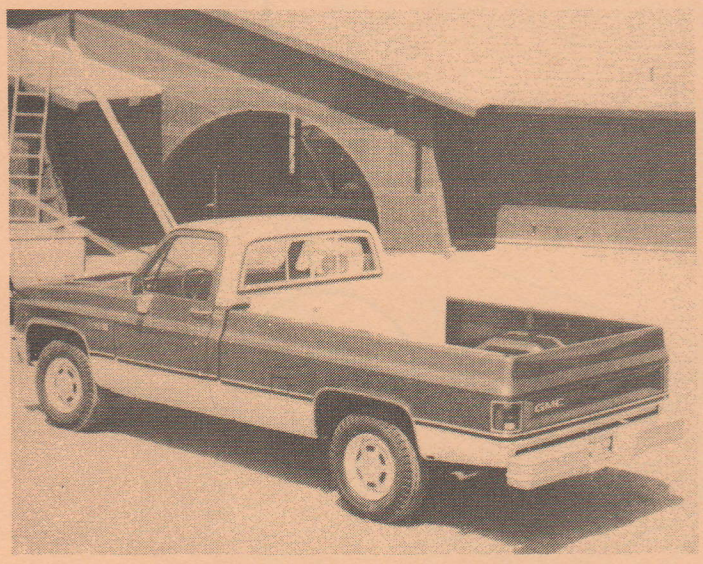

Model 78-10

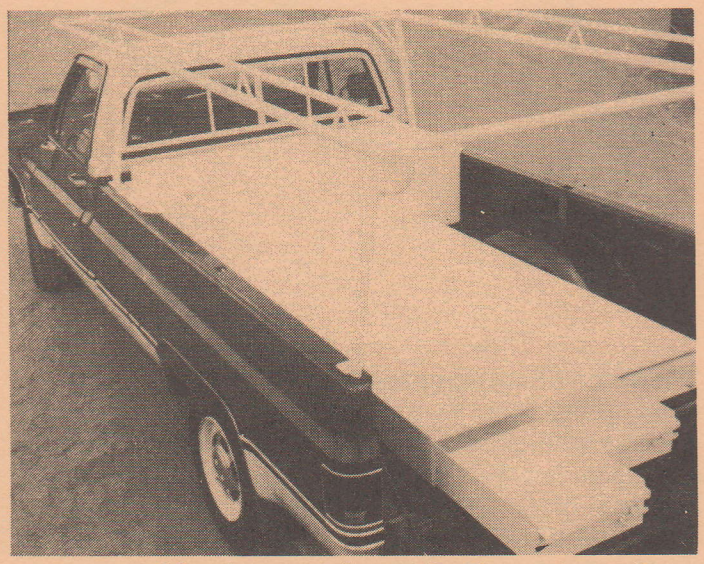

Designed for the **McWelco** rack. Also mates with floor units and side boxes

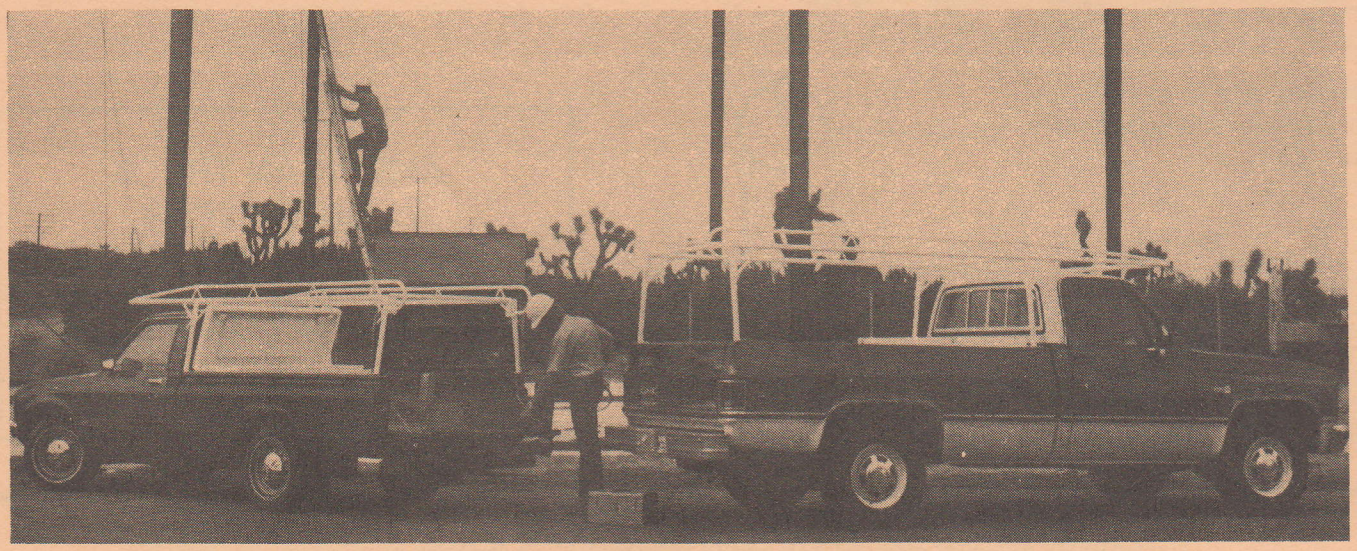

McWelco Boxes and racks always on the job.

McWelco

Domestic Cross-Cab Boxes

5/1/87

McWelco 78 Series Features:

Rigid formed 16 gauge body and lid.
Built-in mechanical weather seal.
Smooth ground continuous welded seams.
Full sliding steel tray keeps small parts within reach.
Easy mount angle.
Easy opening, reinforced lid.
Gas operated shock holds lid open.
Double locking slam-latch security system.
Designed to fit with overhead rack.
Durable gloss white urethane acrylic enamel finish.

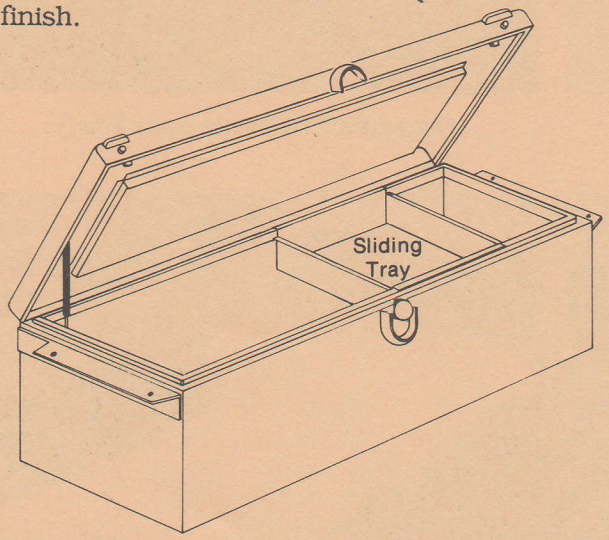

The McWelco 78 Series is a stylish but rugged Cross Cab Box, Constructed from heavy 16 gauge reinforced formed steel. Our one lid box gives you more room to get "in and out" with ease, no confinement as common with two lid boxes. We have designed a unique "double actuated" locking system, that permits entry from either side. **McWelco's** exclusive weather proof design keeps even the worst weather out – protecting your valuable tools.

Model	Length	Depth	Height	Wt /lbs
78-A10*	62 3/4	22	17 3/4	160

*Option 'A': American #2000 Super Lock in guard shroud.

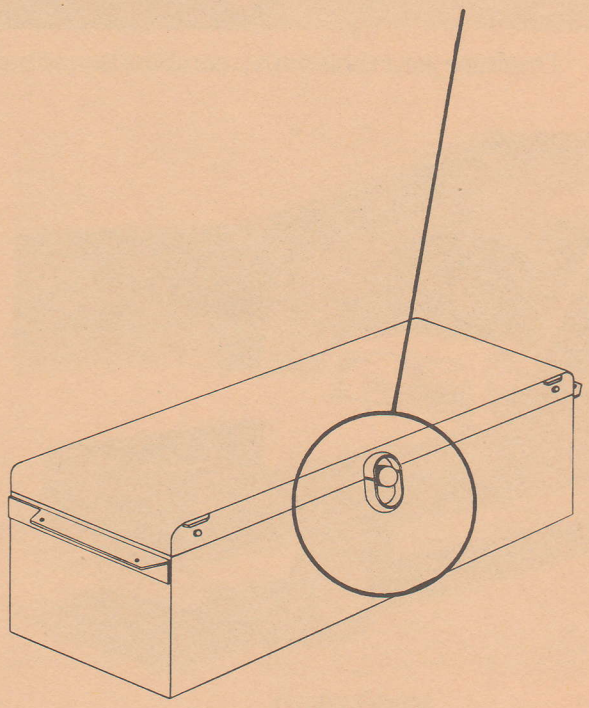

McWelco's Side Opening Cross Cab Box

Our Model 7221 is a heavy duty tool box for the person who prefers two (2) side opening lids. The exclusive "slam-latch" locking and lid reinforcing systems make this tool box theft resistant. One (1) large full sliding steel tray completes this tool box for the discriminating buyer.

Model	Length	Depth	Height	Wt /lbs
7221	73/63	24	16 1/2	170

Proven dependable slam-latch locking system will withstand a lifetime of abuse.

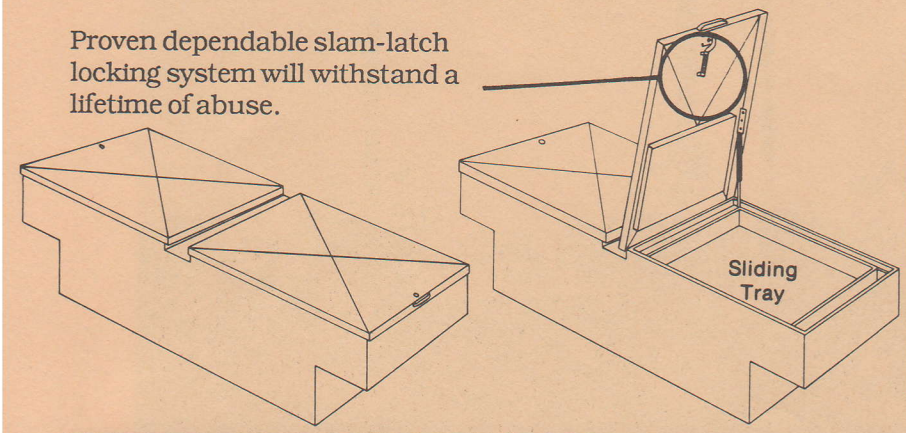

AMERICAN TRUCK OUTFITTERS
Formerly Security Emporium

8605 KEWEN AVE.
SUN VALLEY, CA 91352
(818) 504-0235

1201 E. BALL RD.,
ANAHEIM, CA 92805
(714) 999-5061

McWelco Longlife Quality Products

are conditionally guaranteed against defects in material and workmanship to the original owner for three years and will be repaired or replaced at our option (proof of purchase date shall be the responsibility of the customer.)

McWelco

Low Profile High Volume R.V. Boxes

5/1/87

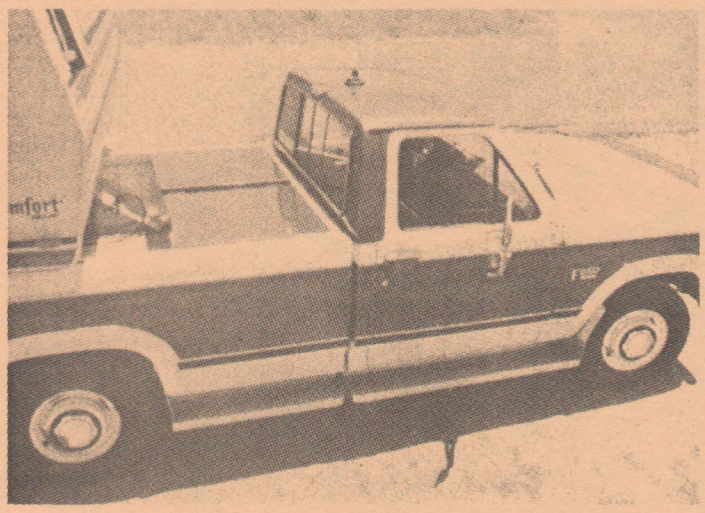

The perfect Trunk for your Truck.

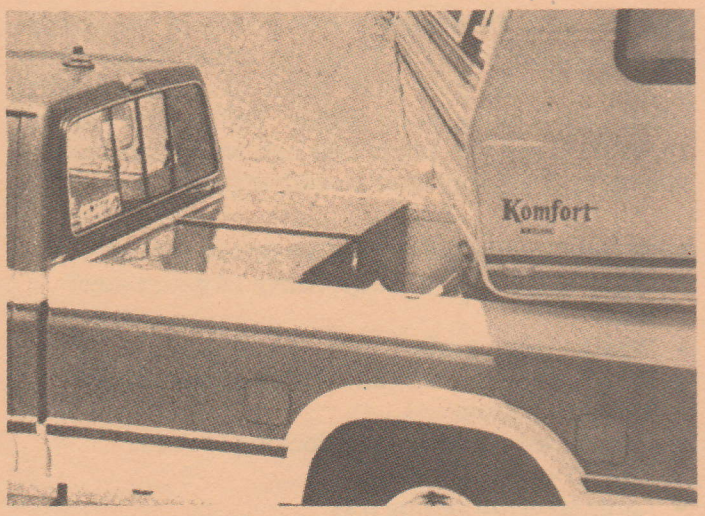

Low profile design is never an obstruction.

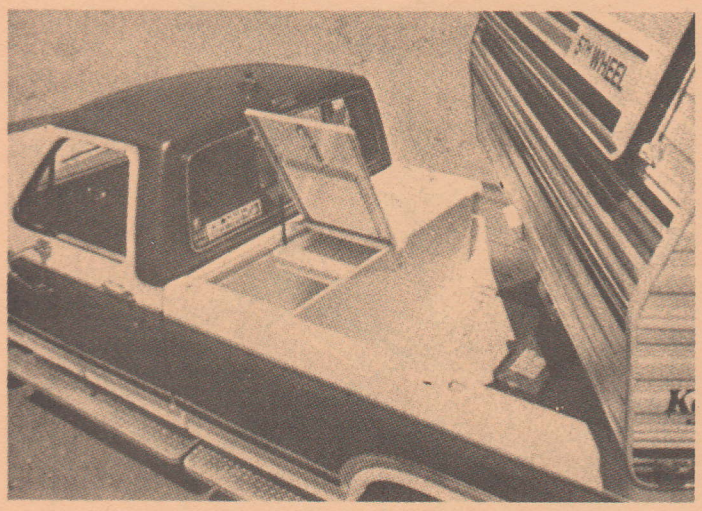

For short truck beds or small volume, choose Model 7421

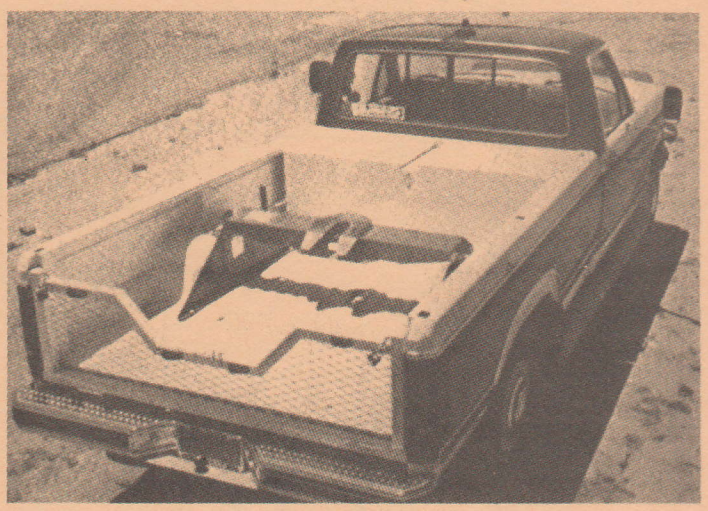

Model 7421

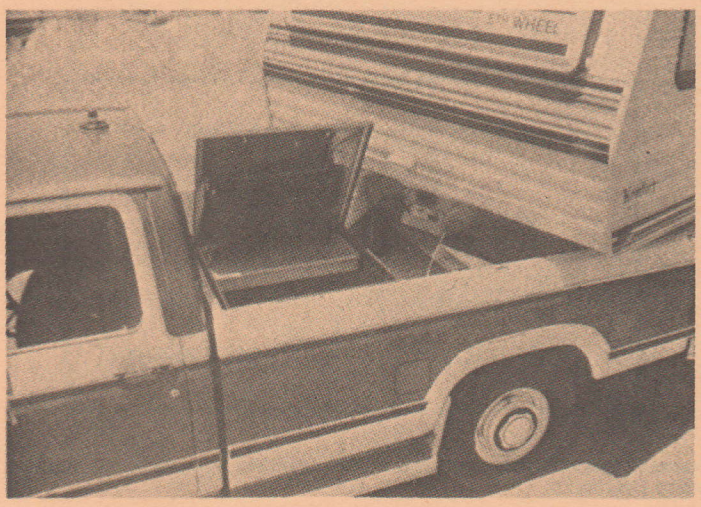

For large volume, choose Model 7521
More For Your Money.



Model 7521

McWelco

Low Profile High Volume R.V. Boxes

5/1/87

The 74 and 75 Series are special tool boxes that have the fifth wheel R.V. rig in mind. These flush mounted boxes give that extra clearance needed when jack knifing your trailer. Utilize that wasted space between the hitch and cab with high volume storage and security that's weather tight.

McWelco Double Lid Cross Cab Boxes Feature:

- Rigid 16 gauge steel body, heavy 14 gauge steel lids.
- Weather tight seals.
- Easy open reinforced lid with positive operated supported arms.
- Theft resistant slam-latch locking system.
- Full 75° opening lids.
- Large steel full sliding tray.
- Durable gloss white urethane acrylic enamel finish.

Model		Length	Depth	Height	Wt /lbs
Domesic	7421	63 1/2	20	19	165
Domestic	7521	63 1/2	30	19	190
Import	7D21	52 3/4	18	16	120

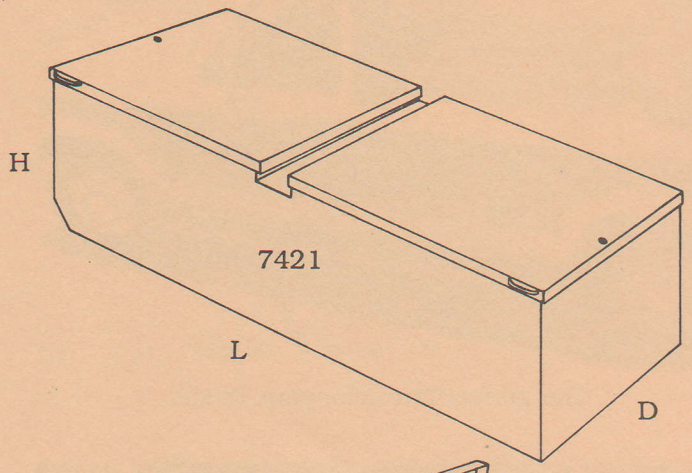

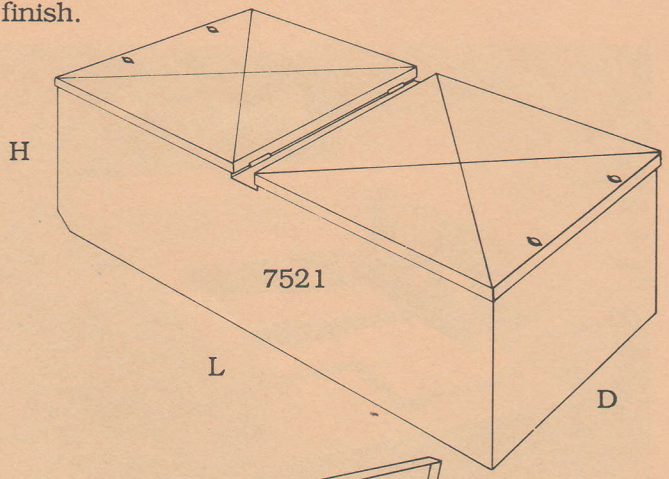

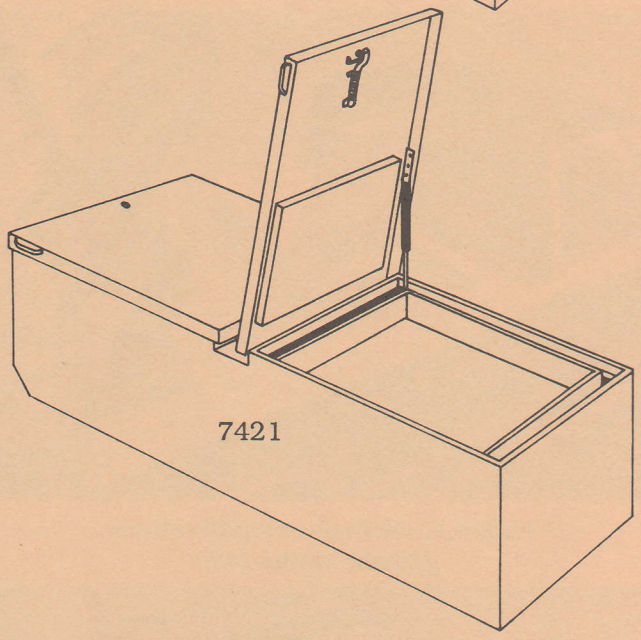

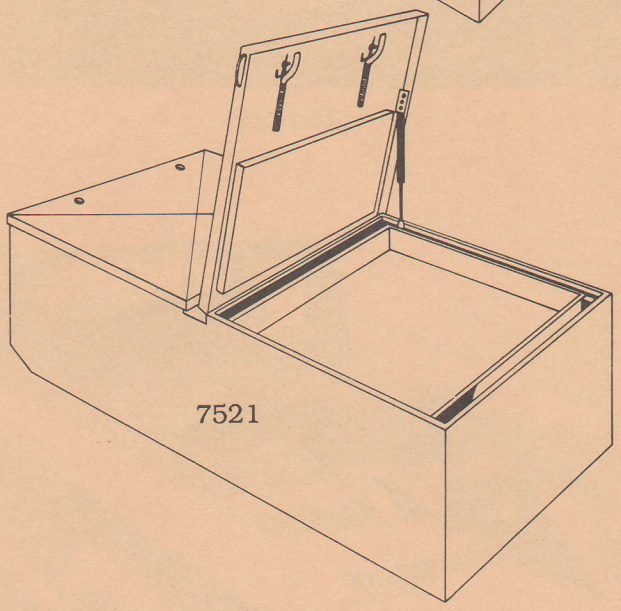

AMERICAN TRUCK OUTFITTERS

Formerly Security Emporium

8605 KEWEN AVE.
SUN VALLEY,CA 91352
(818) 504-0235

1201 E. BALL RD.,
ANAHEIM, CA 92805
(714) 999-5061

McWelco Longlife Quality Products

are conditionallyguaranteed against defects in material and workmanship to the original owner for three years and will be repaird or replaced at our option (proof of puchase date shall be the responsibility of the customer.)

McWelco

Compact Truck Rack

5/1/87

		Model Size Number			
Make	Year	Long Bed	Reg. Bed	Short Bed	Ext. Cab
Toyota:	69-75	N/A	*1	N/A	N/A
	76-83	*3	*1	*1	N/A
	84-87	*3(18)	N/A	4	*19
Datsun: (Nissan)	69-84	50	*1	*1	*19
Nissan:	85-87	*5	N/A	*7	6
Courier:	72-76	N/A	2	N/A	N/A
	78-83	*3	*1	N/A	N/A
Mazda:	72-76	N/A	2	N/A	N/A
	83-87	*3(16)	N/A	*1	N/A
Chev. S-10: (GMC S-15)	82-87	*12	N/A	13	17
Ranger: (Ram 50) (Mitzubishi)	82-87	*14	N/A	15	N/A
Volkswagen:	80-84	N/A	9	N/A	N/A
Isuzu:	82-87	10	N/A	11	N/A
Luv:	73-77	N/A	2	N/A	N/A
	78-80	*70	N/A	2	N/A
	81	100	N/A	110	N/A

*Denotes Stocked Models

The McWelco Truck Rack is the rack for the discriminating buyer who requires strength, styling and durability. Constructed of high strength tubular steel with engineered bracings. The tapered leg styling, removable back bar and quiet air flow design mark this rack as the leader. Design Tested on the job for over 30 years. This rack has the highest ratio of weight (100 Lb.) to carrying capacity (1250 Lb. distributed) of any rack offered on the market today. Finished in durable white gloss enamel.

Finished in durable gloss white urethane acrylic enamel.

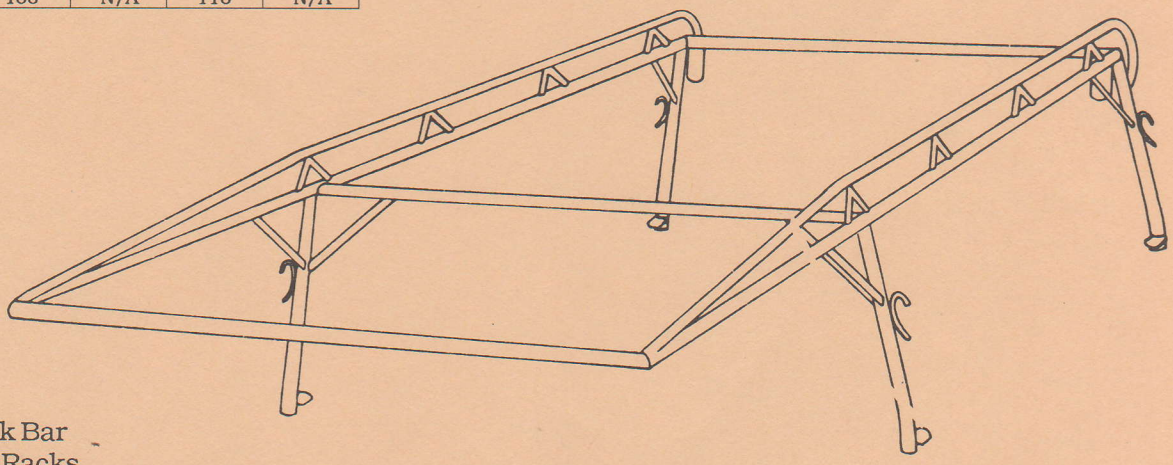

Removable Back Bar
Standard On All Racks

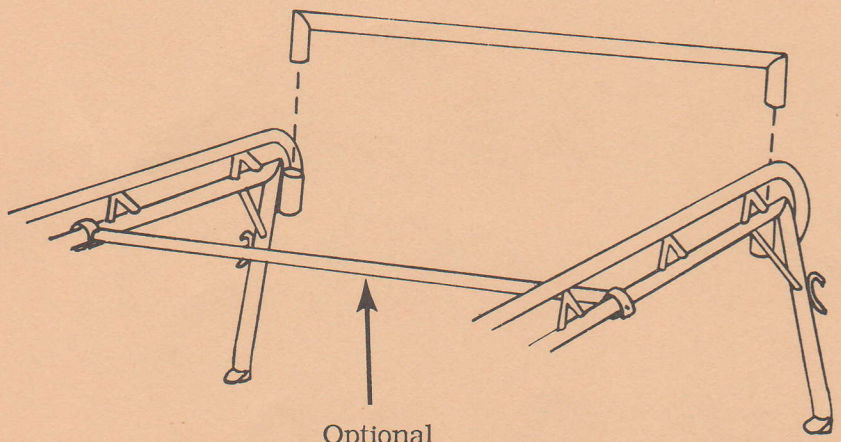

Optional
Removable Intermediate Bar

AMERICAN TRUCK OUTFITTERS

Formerly Security Emporium

8605 KEWEN AVE.
SUN VALLEY, CA 91352
(818) 504-0235

1201 E. BALL RD.,
ANAHEIM, CA 92805
(714) 999-5061

McWelco Longlife Quality Products

are conditionally guaranteed against defects in material and workmanship to the original owner for three years and will be repaired or replaced at our option (proof of purchase date shall be the responsibility of the customer.)

McWelco

Domestic Truck Racks

5/1/87

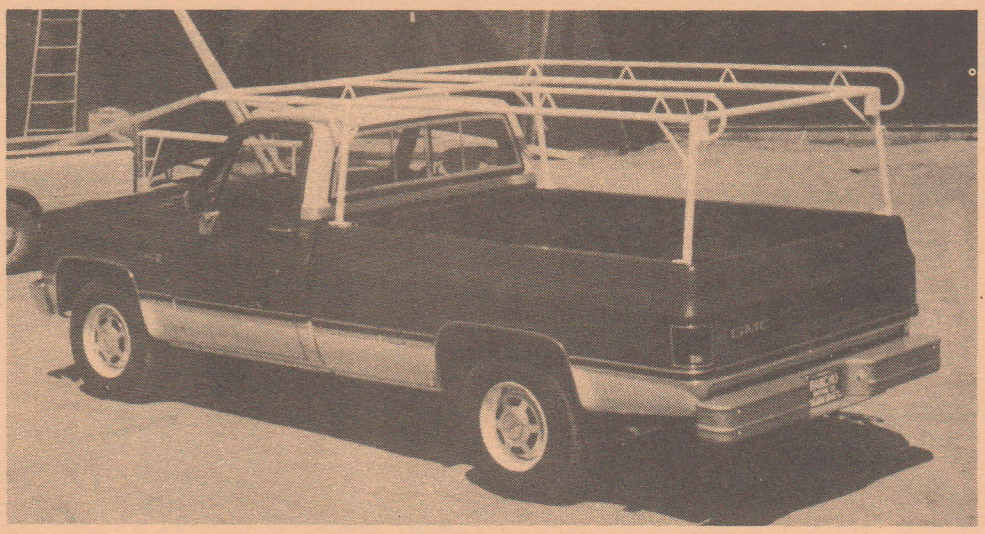

Made to look good and do the job it was intended to do for over thirty years without a known failure.

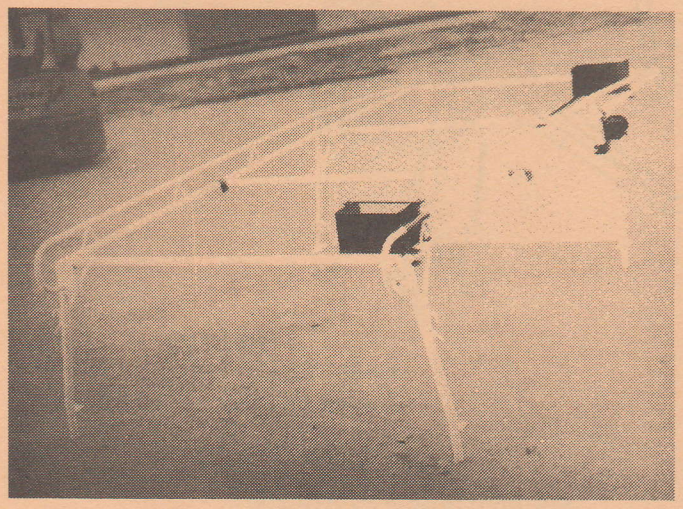

Many accessories including cab-protection screen. K.D. or weld-on.

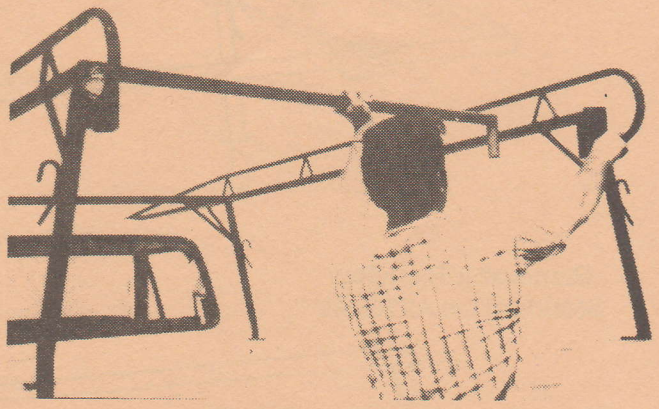

Instant accessibility to the bed with removable back bar.

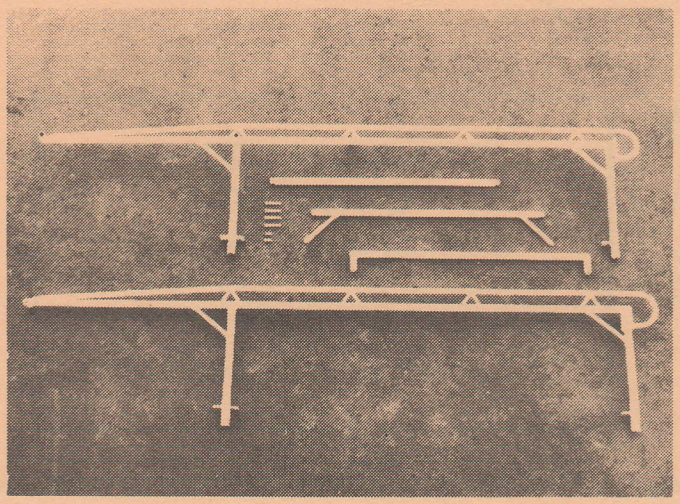

Knock-down Model 300 for one man installation and easy storage.

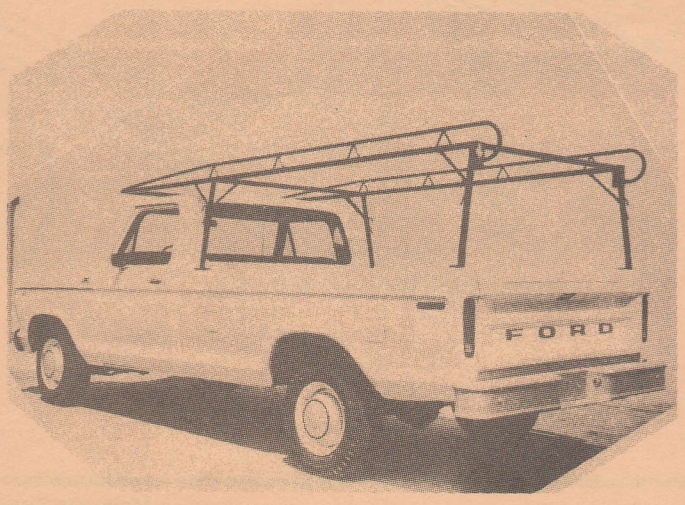

White or black urethane finish – special colors available.

McWelco

Domestic Truck Rack

5/1/87

245	Fits Domestic Shortbed Pickup
255	Fits Domestic Standard Pickup
270	Fits Domestic Extended Cab Pickup
280	Fits Domestic Crew Cab Pickup

The McWelco Truck Rack is the rack for the discriminating buyer who requires strength, styling and durability. Constructed of high strength tubular steel with engineered bracings. The tapered leg styling, removable back bar and quiet air flow design mark this rack as the leader. Design Tested on the job for over 30 years. This rack has the highest ratio of weight (125 Lb.) to carrying capacity (1500 Lb. distributed) of any rack offered on the market today.

Finished in durable gloss white urethane acrylic enamel.

Optional
Conduit bins right or left hand side, weld-on or K.D. style.

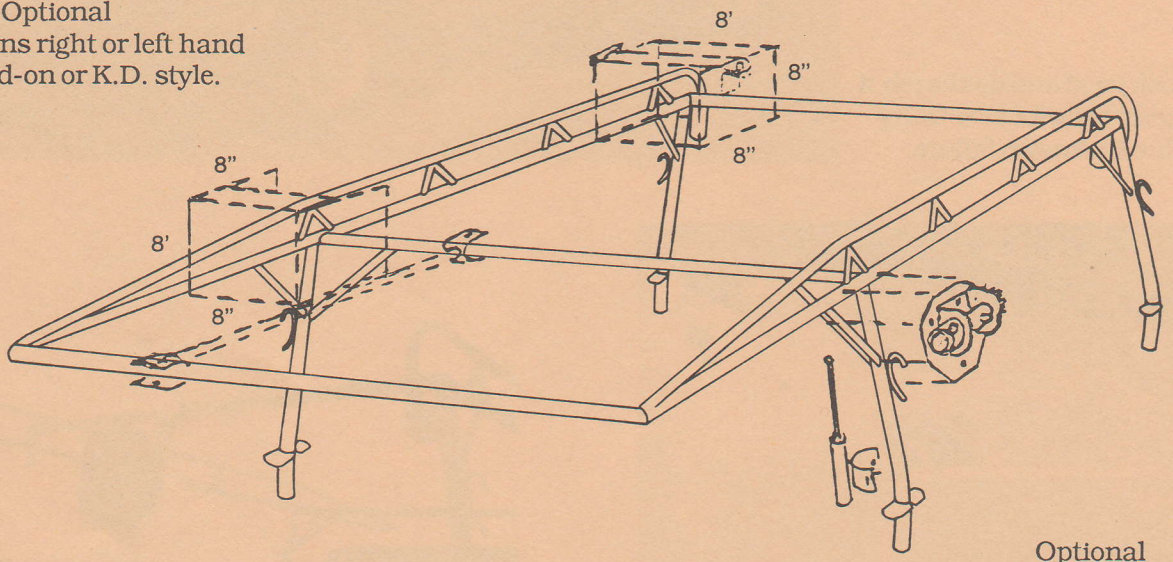

Optional
Binder winch with handle and holder–weld-on or K.D. style.

Removable Back Bar
Standard On All Racks

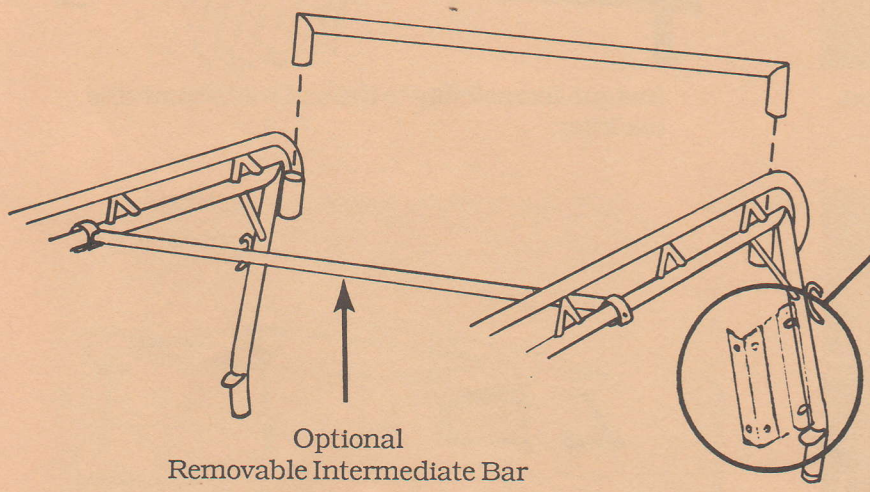

Option 'X'
For high profile side boxes – bracket welded to leg and connector angle each leg.

Optional
Removable Intermediate Bar

AMERICAN TRUCK OUTFITTERS

Formerly Security Emporium

8605 KEWEN AVE.
SUN VALLEY, CA 91352
(818) 504-0235

1201 E. BALL RD.,
ANAHEIM, CA 92805
(714) 999-5061

McWelco Longlife Quality Products

are conditionally guaranteed against defects in material and workmanship to the original owner for three years and will be repaired or replaced at our option (proof of purchase date shall be the responsibility of the customer.)

McWelco

Floor Drawer Units

5/1/87

Model	Qut. of Drawers	Type	Size	Drawer Depth	Wt /Lb
2366	2	Roller	66L x 38D x 11H	8"	275
2380	2	Roller	80L x 38D x 11H	8"	300
2466	2	Roller	66L x 48D x 11H	8"	325
2495	2	Roller	95L x 48D x 11H	8"	365

Friction Mode	Qut. of Draers	Type	Size	Drawer Depth	Wt /Lb
3154	3	Friction	54L x 38D x 7H	6"	190
3272	3	Friction	72L x 48D x 7H	6"	280

The McWelco Floor Drawer Roller Unit was designed for those that demand the most from their equipment. A ruggedly constructed inner frame work covered by 16 gauge sheet steel with fully welded smooth ground seams is just the beginning. The two heavy duty drawers each have 6 sealed roller bearings mounted in such a way as to allow self support extension of over 70% of drawer length, with 500 Lbs. capacity per drawer, thus insuring years of easy access. In addition, the front weather resistant door has two "snap" latches plus a central lock guard and an American "2000" super lock. We at **McWelco** feel that this unit is the strongest, safest and easiest to use on the market today.

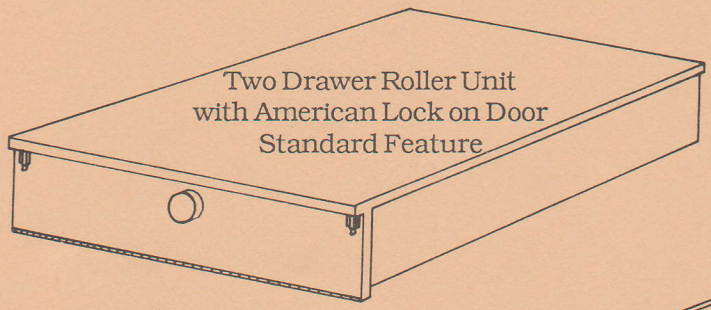

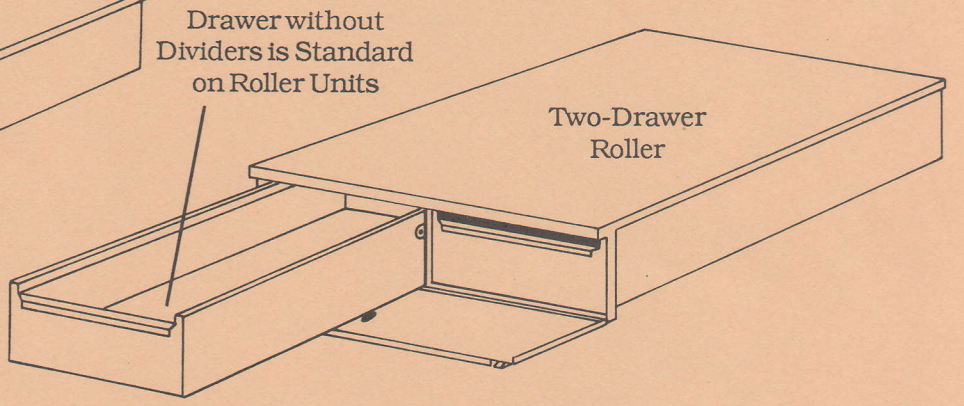

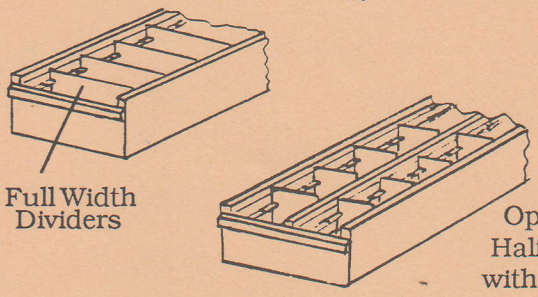

The **McWelco** floor drawer friction unit was designed for the economy minded person. NOTE: For full extension, the drawer must be supported by pick-up tail gate or other device.

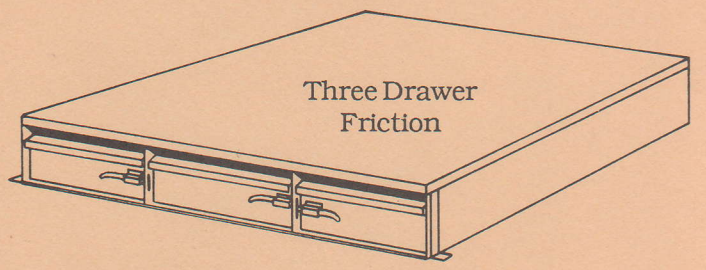

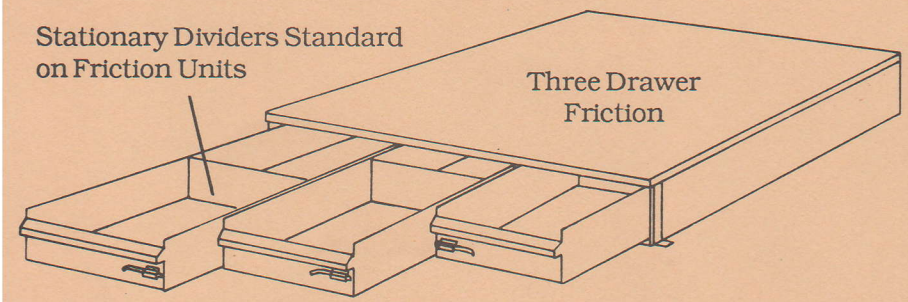

Optional: Drawer with Adjustable Dividers or No Dividers – Clear Full Length.

AMERICAN TRUCK OUTFITTERS

Formerly Security Emporium

8605 KEWEN AVE.
SUN VALLEY,CA 91352
(818) 504-0235

1201 E. BALL RD.,
ANAHEIM, CA 92805
(714) 999-5061

McWelco Longlife Quality Products

are conditionally guaranteed against defects in material and workmanship to the original owner for three years and will be repaired or replaced at our option (proof of purchase date shall be the responsibility of the customer.)

McWelco

DX Series Underbody Boxes

5/1/87

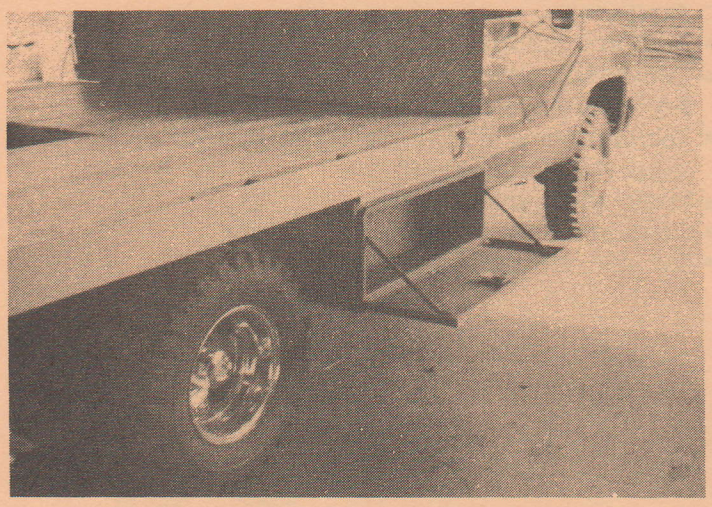

Exclusive "water lock-out" system designed only on "DX" series. keeps contents dry without depending on gasket material seals that can wear out.

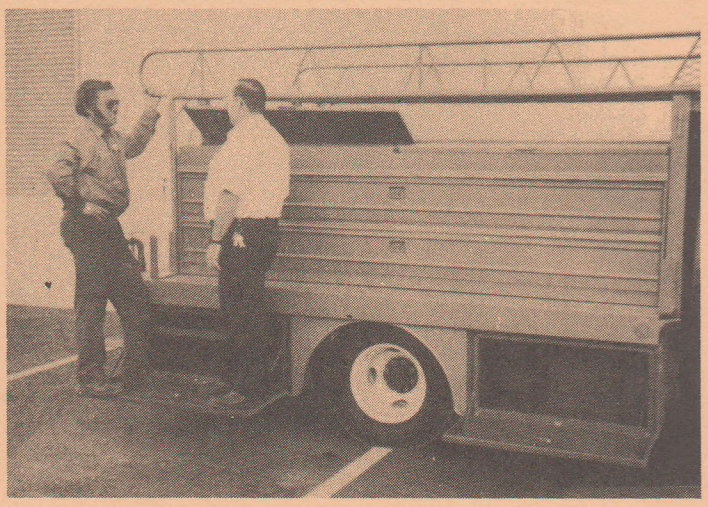

The "DX" door is super heavy duty. Using folding arms, and not chain that can foul in door jams, the door can support over 400 lbs. . A built-in step to your truck bed.

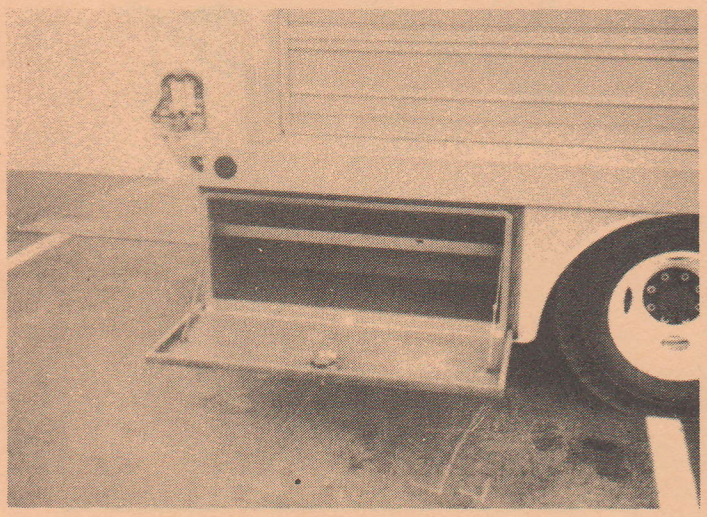

Shelves and drawers are another handy option.

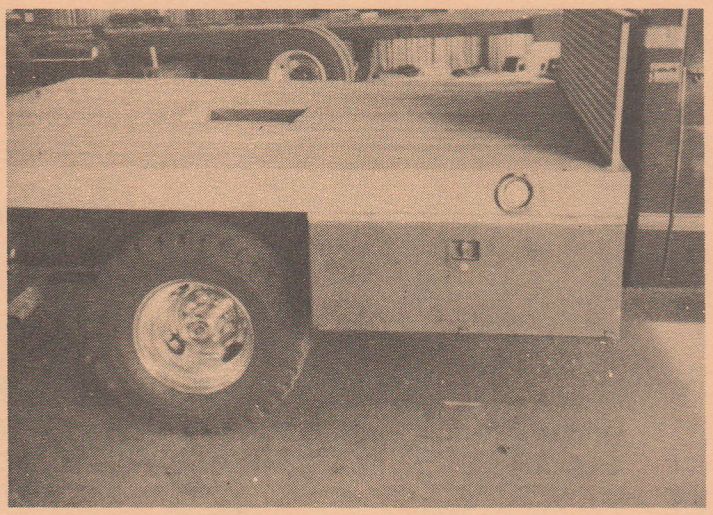

"T" handle latch available in place of paddle latch.

McWelco

DX Series Underbody Boxes

5/1/87

Model	Size	Wt/lb
DX-030	30L x 14H x 141/2D	55
DX-042	42L x 14H x 141/2D	75
DX-236	36L x 18H x 20D	82
DX-248	48L x 18H x 20D	102
DX-260	60L x 18H x 20D	122

DX Series Features:

- Rigid formed 16 gauge body and heavy duty 12 gauge door.
- Built in mechanical weather resistant seal.
- Convenient paddle latch handle with built in key locking system.
- Folding door arms (tail gate style) that will support a man's weight.
- Freeze proof hinge.
- Continuous electric arc welded seams.
- Durable red oxide primer finish.

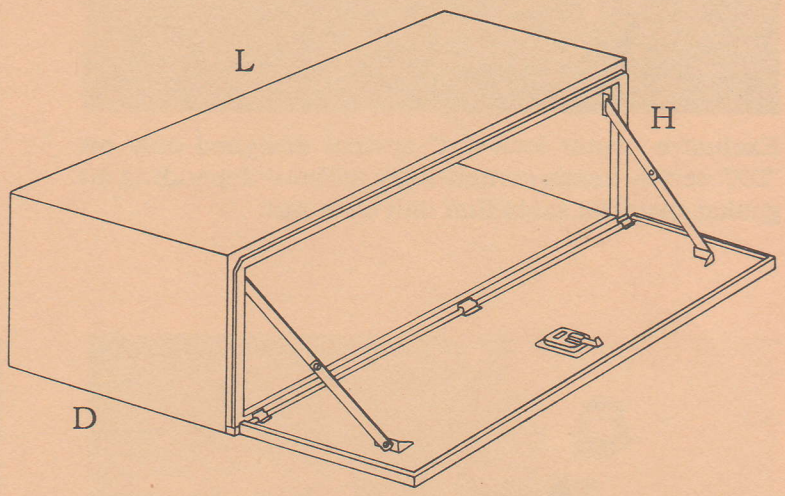

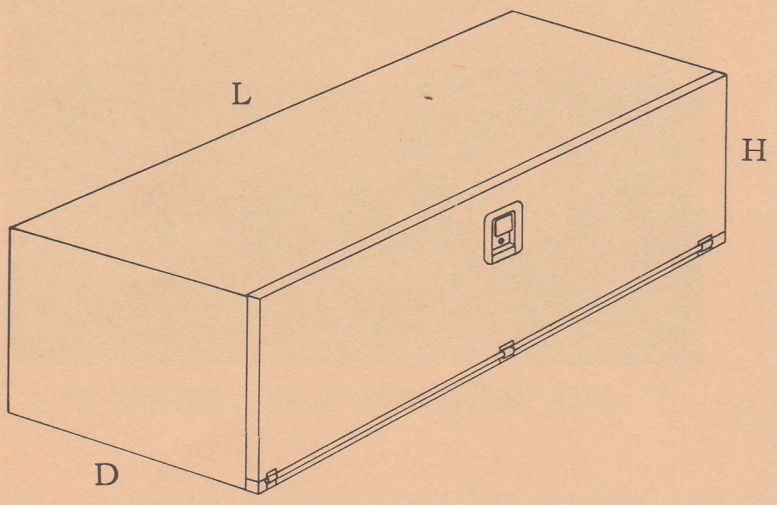

AMERICAN TRUCK OUTFITTERS

Formerly Security Emporium

8605 KEWEN AVE.
SUN VALLEY, CA 91352
(818) 504-0235

1201 E. BALL RD.,
ANAHEIM, CA 92805
(714) 999-5061

McWelco Longlife Quality Products

are conditionally guaranteed against defects in material and workmanship to the original owner for three years and will be repaired or replaced at our option (proof of purchase date shall be the responsibility of the customer.)

McWelco

Small Gang Boxes

5/1/87

Model	Ssize	Wt / lbs
4S	30L x 18D x 14H	50
7S	36L x 18D x 18H	65
8S	45L x 18D x 15H	75
9S	48L x 18D x 18H	85
12S	48L x 24D x 18H	100

McWelco Small Gang Boxes Feature:

Rigid formed 16 gauge body and heavy duty 14 gauge door.
Continuous electric arc welded seams.
Weather tight reinforced lid with positive acting gas operated support arms.
Your choice of two different locking systems.
Durable gloss white urethane acryilic enamel finish.

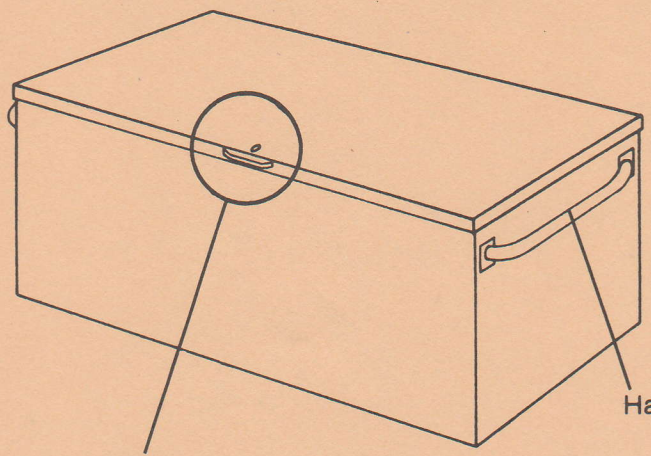

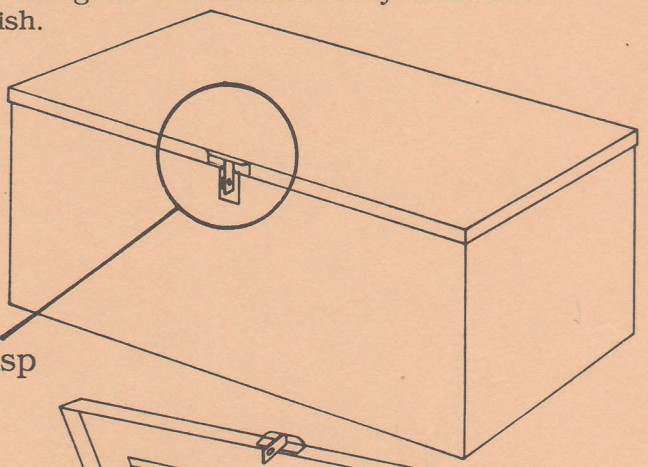

Slam-Latch
with Lock and Key

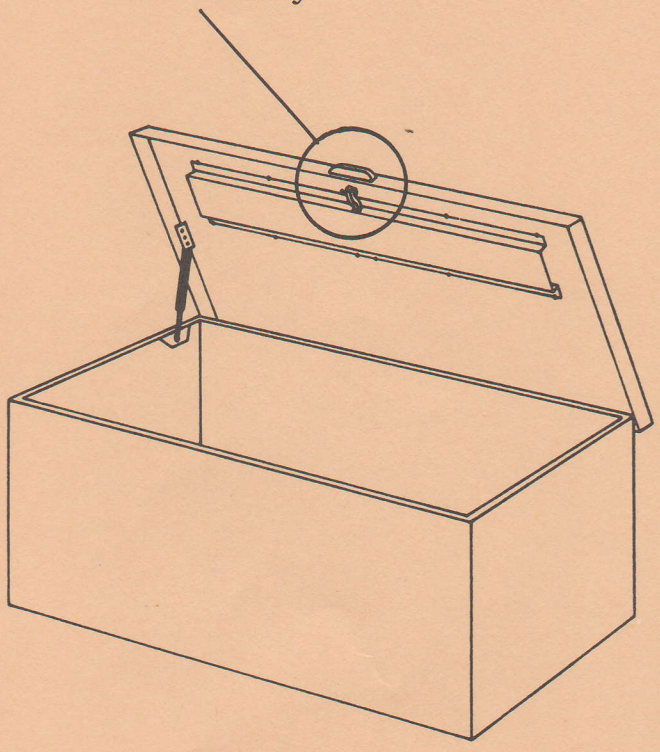

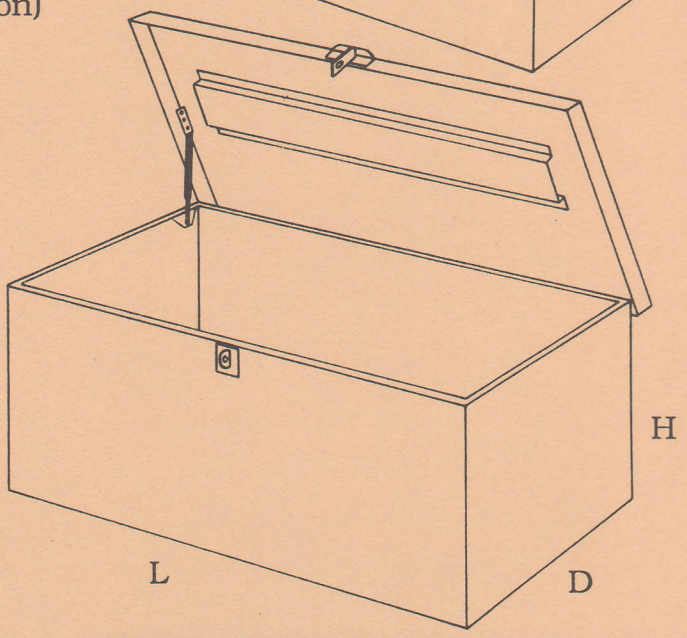

AMERICAN TRUCK OUTFITTERS

Formerly Security Emporium

8605 KEWEN AVE.
SUN VALLEY,CA 91352
(818) 504-0235

1201 E. BALL RD.,
ANAHEIM, CA 92805
(714) 999-5061

McWelco Longlife Quality Products

are conditionally guaranteed against defects in material and workmanship to the original owner for three years and will be repaired or replaced at our option (proof of purchase date shall be the responsibility of the customer.)

McWelco

Trade Price List
Truck Boxes & Racks

5/1/87

	Model No.	Description	Ship Wt.	Trade Price
Small Gang Boxes	3S	22L x 13W x 14H	33	109.00
	4S	30L x 18W x 14H	50	129.00
	7S	36L x 18W x 18H	65	149.00
	8S	45L x 18W x 15H	75	169.00
	9S	48L x 18W x 18H	85	169.00
	12S	48L x 24W x 18H	100	179.00
Gang Box Accessories	Handles	Weld-On (2)	3	29.00
	Handles	Chrome - set of 2 (kit)	1	19.00
	# 1, 2 or 3	Tray	8	19.00
		Padlock Hasp in Place of Slam Latch		19.00
Deluxe Series Under Body Boxes	DXO30	30L x 14 1/2D x 14H	55	189.00
	DXO42	42L x 14 1/2D x 14H	75	199.00
	DX236	36L x 20D x 18H	82	209.00
	DX248	48L x 20D x 18H	102	229.00
	DX260	60L x 20D x 18H	123	249.00
Under Body Box Accessories	UBA72	Door Arms (parts only)	3	29.00
	UBA73	Door Arms (parts installed)	4	39.00
	UBA72	Paddle Latch	3	19.00
	UBA83	"T" Handle Latch	6	29.00
Floor Drawer Units	2366	Two Drawer Roller	275	659.00
	2380	Two Drawer Roller	300	689.00
	2466	Two Drawer Roller	325	699.00
	2495	Two Drawer Roller	365	759.00
	3154	Three Drawer Friction	190	339.00
	3272	Three Drawer Friction	280	379.00
Floor Drawer Accessories	FD20	Side Dividers (ea. dwr.)	12	89.00
	FD30	Side & Center Dividers (ea. dwr.)	25	99.00
Domestic Truck Racks *	245	Short Bed	120	349.00
*	255	St. Dom.	125	349.00
	256	Dodge	120	349.00
	270	Super Cab	130	349.00
*	280	Crew Cab	130	349.00
*	500	Yoke Rack Dom.	25	139.00
	550	Yoke Rack - Imp. Compact	20	139.00
	600	El Camino	100	595.00
Compact Truck Racks *		1, 3, 12, 14, 19 & 20	100	349.00
		2, 4, 5, 6, 7, 8, 9, 10, 13, 15, 16, 17 & 21	100	349.00
Special Size Pick-Up Truck		Standard Design Domestic or Compact	100	369.00
Van Racks	VCB2	Cross Bars (2)	30	119.00
	VCB3	Cross Bars (3)	45	169.00

	Model No.	Description	Ship Wt.	Trade Price
Large Truck Racks **	650	P/U Rack to Frt. Bumper	140	P.O.R.
	700	Service Body St.	140	P.O.R.
**	750	Service Body-Frnt Bumper	240	P.O.R.
	800	Flat Bed Standard	165	P.O.R.
**	850	Flatbed to Front Bumper	255	P.O.R.
Rack Options & Accessories	OP10	X-Option	5	129.00
	AC-10	R.I.B. #620, #525, #660	10	29.00
	AC30	Weld-On Winch w/Handle	8	49.00
	AC32	2 Weld-On Winches w/Handle	16	89.00
	AC45	Weld-On Conduit Bin Set (2)	25	99.00
5th Wheel R.V. Boxes	7421	Std.-Dom.	165	329.00
	7421DB	For Bedliner	165	349.00
	7521	Jumbo - Dom.	190	389.00
	7521DB	For Bedliner	190	419.00
	7521N	For Over Fender Hitch	190	439.00
	7D21	Compact Long Bed	120	259.00
	7D21N	Compact Short Bed	120	309.00
Domestic Pick-Up Cross-Bed Boxes	78-A10	w/American Lock & Guard	170	359.00
	7221	Std. Dom.	180	319.00
	7ELC	El Camino - sculptured	130	529.00
Compact Pick-Up Cross-Bed Boxes	78ACS	w/American Lock & Guard	140	359.00
	78AN	Short Bed w/American	140	399.00
	7L21	Std. Comp.	140	299.00
	7VW21	VW and Dom. Stepside	100	289.00
Cross-Bed Box Accessories		Trays-State Box Model	10	19.00
		Mounting Angles	15	29.00
		Cam and Plunger Locks		4.00
		Gas Arm Lid Props	1	14.95
Lo Side Boxes	4148D	48" Long	60	169.00
	4158D	58" Long	70	179.00
	4162S	62" Long	75	179.00
	4278D	78" Long	95	249.00
	4287S	87" Long	105	259.00
Hi Side Boxes	8148	48" Long	90	199.00
	8167	67" Long	115	249.00
	8278	78" Long	135	299.00
	8287	87" Long	150	299.00
	9148	48" w/Flip Top	110	319.00
	9167	67" w/Flip Top	150	359.00
	9278	78" w/Flip Top	170	439.00
	9287	87" w/Flip Top	185	449.00
Hi and Lo Side Box Accessories	B40	Fend. Brkt. Lo Box ea.	4	4.99
	L40	Mount Large Lo Box Set of 2	6	9.99
	L89	Mount Legs Hi Box Set of 2	8	9.99

* Standard Stock Racks ** Includes Factory Installation

Prices and Design subject to change without prior notice.

McWelco Longlife Quality Products

are conditionally guaranteed against defects in material and workmanship to the original owner for three years and will be repaired or replaced at our option (proof of purchase date shall be the responsibility of the customer.)